TABLE OF CONTENTS

1- scale print of RUSSIAN PPSH-41

1- scale print of YUOGOSLAV 49/57

1- scale print of AMERICAN 180

1- scale print of BROWNING 1919A4/A6
right and left sides

PARTS SUPPLIERS ON LAST PAGE

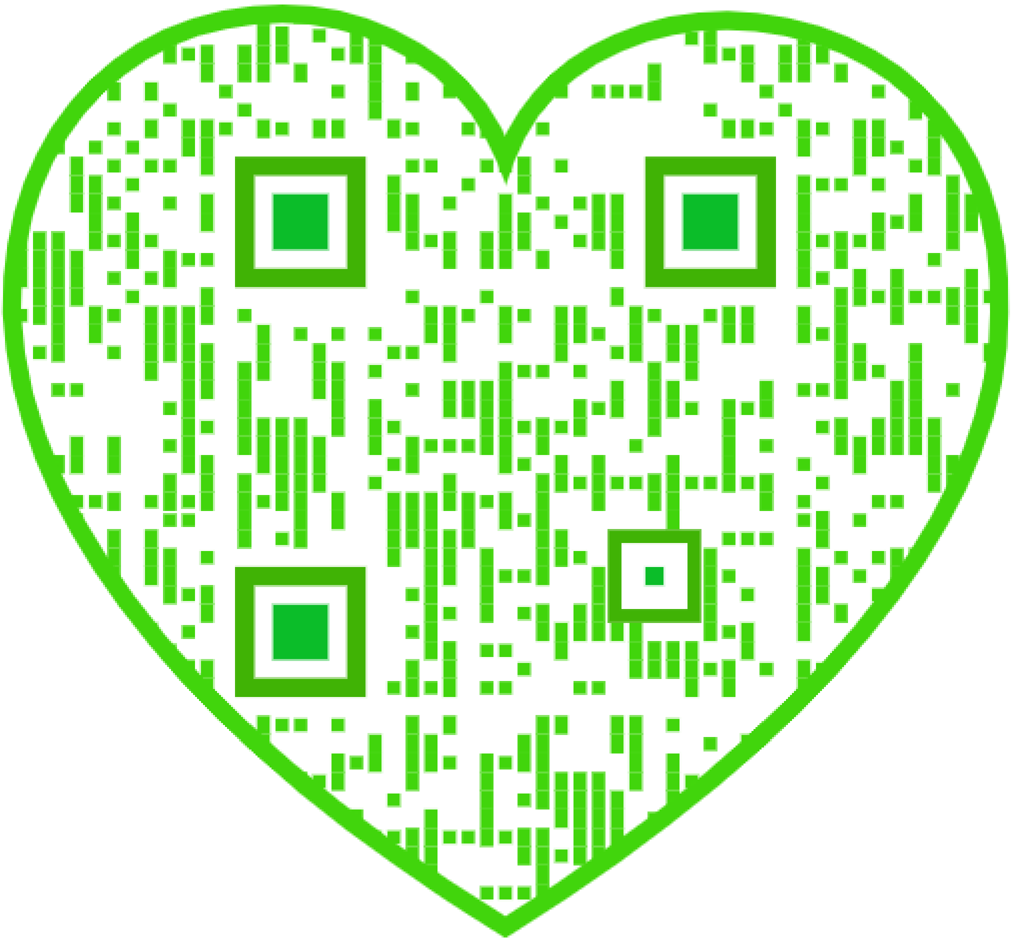

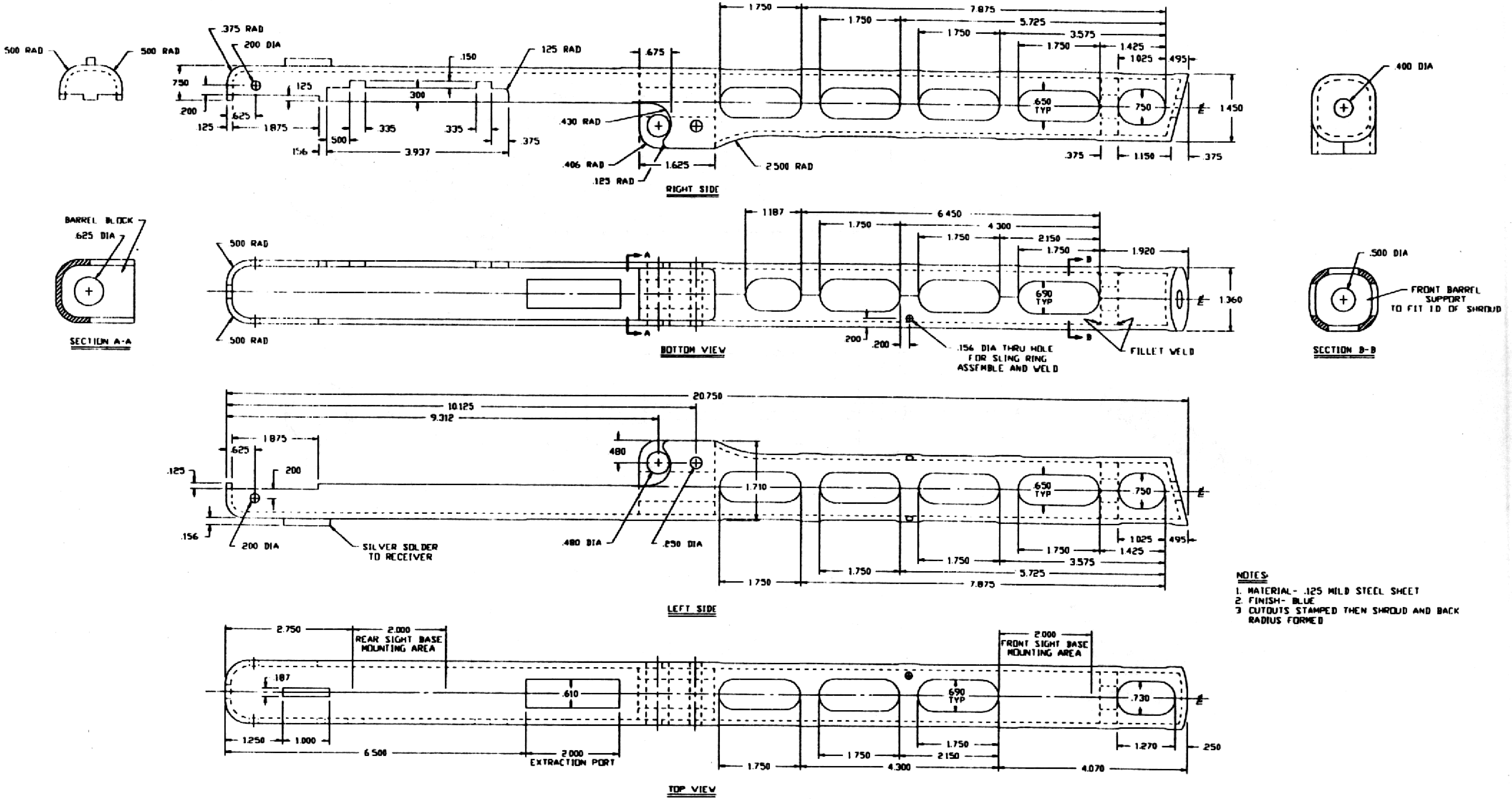
RIGHT SIDE
BOTTOM VIEW
LEFT SIDE
TOP VIEW
SECTION A-A
SECTION B-B
500 RAD
.375 RAD
.200 DIA
.150
125 RAD
.675
.430 RAD
.406 RAD
.125 RAD
1.625
2.500 RAD
1.750
7.875
5.725
3.575
1.425
1.025
.495
.650 TYP
.750
1.450
.375
1.150
.400 DIA
BARREL BLOCK
.625 DIA
1.187
6.450
4.300
2.150
1.920
.690 TYP
1.360
.156 DIA THRU HOLE FOR SLING RING ASSEMBLE AND WELD
FILLET WELD
.500 DIA
FRONT BARREL SUPPORT TO FIT I.D. OF SHROUD
20.750
10.125
9.312
1.875
.480
1.710
SILVER SOLDER TO RECEIVER
.480 DIA
.250 DIA
2.750
2.000
REAR SIGHT BASE MOUNTING AREA
FRONT SIGHT BASE MOUNTING AREA
.187
.610
.730
1.250
1.000
6.500
2.000 EXTRACTION PORT
4.070
1.270
.250

NOTES:

1. MATERIAL- .125 MILD STEEL SHEET
2. FINISH- BLUE
3. CUTOUTS STAMPED THEN SHROUD AND BACK RADIUS FORMED

RESTRICTED MATERIAL

CONFIDENTIAL

SCALE: FULL	MATERIAL: SEE NOTE 1	CKD	TOLERANCES DEC 2 PL. ± [illegible] DEC 3 PL. ± [illegible] ANGLES ± 3°
DWN.	FINISH: SEE NOTE 2	DATE	
TITLE: RUSSIAN SUBMACHINE GUN PPSH-41		REV.	NO.

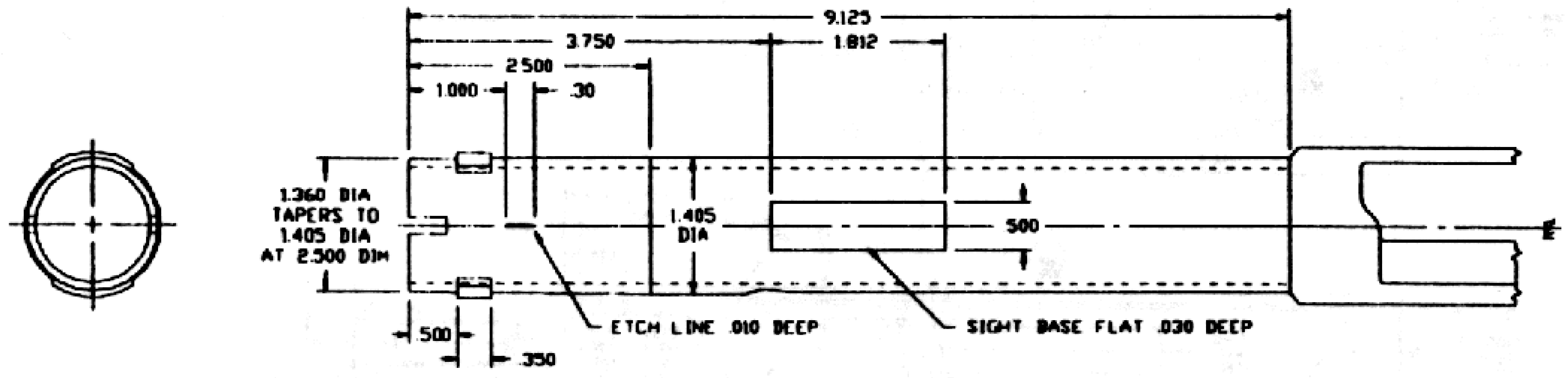
9.125
3.750
1.812
2.500
1.000
.30
1.360 DIA
TAPERS TO
1.405 DIA
AT 2.500 DIM
1.405
DIA
.500
.500
.350
ETCH LINE .010 DEEP
SIGHT BASE FLAT .030 DEEP

TOP SIDE

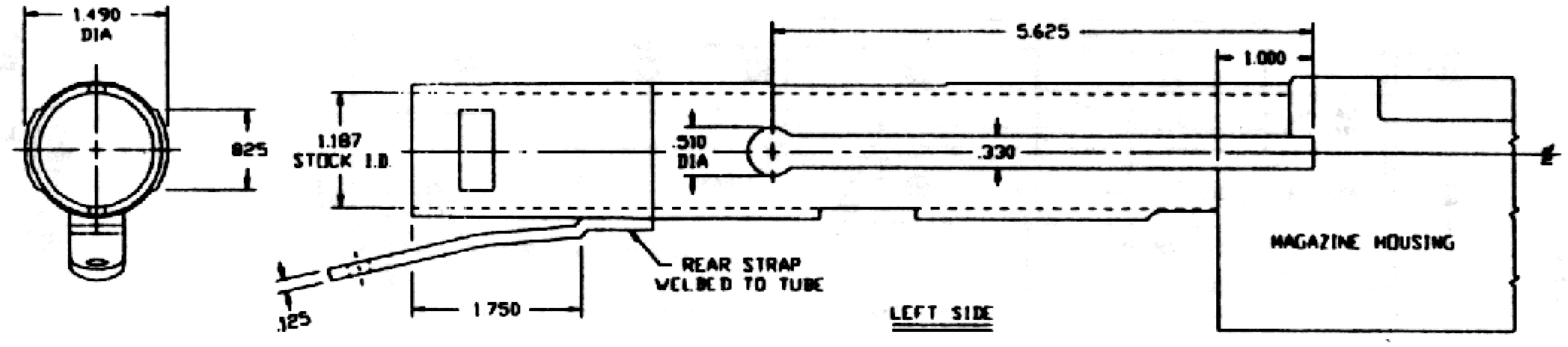
1.490
DIA
.825
1.187
STOCK I.D.
5.625
1.000
.510
DIA
.330
MAGAZINE HOUSING
.125
1.750
REAR STRAP
WELDED TO TUBE

LEFT SIDE

CONFIDENTIAL

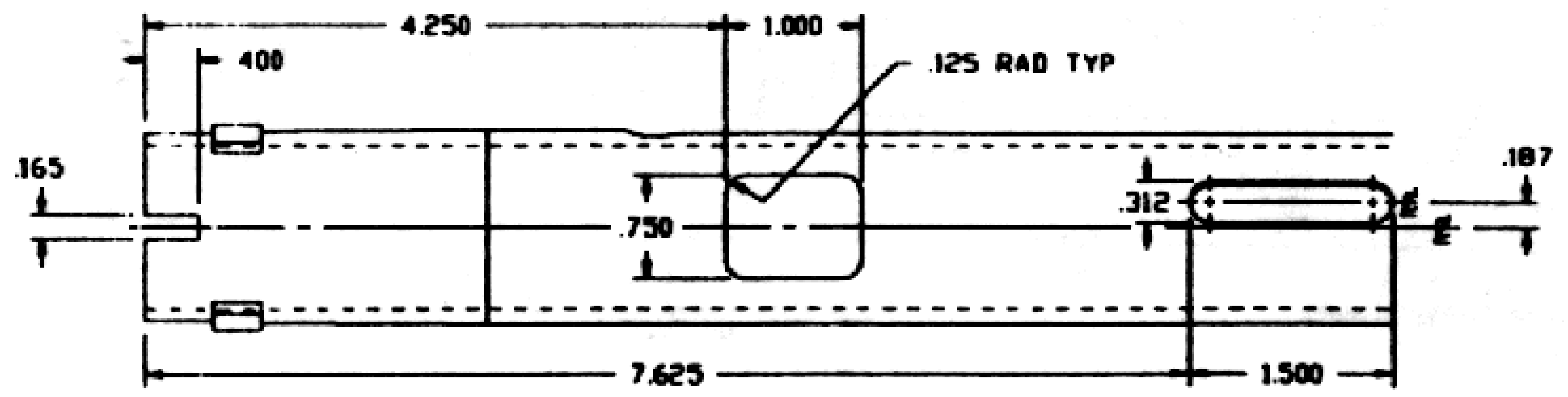
4.250
1.000
.400
.125 RAD TYP
.165
.750
.312
.187
7.625
1.500

BOTTOM SIDE
REAR STRAP NOT SHOWN

NOTES

1. MATERIAL- 1.500 O.D. X 1.187 I.D. D.O.M. STEEL TUBE
2. FINISH- BLUE
3. CALIBER- 7.62 TOKAREV
4. THE ORIGINAL RECEIVER WAS THE FULL LENGTH OF GUN
IT WAS MADE FROM ROLLED STEEL AND WELDED FULL LENGTH.
THE HOUSING WAS BRAZED IN PLACE AND ALL VOIDS
WERE FILLED WITH BRASS.
5. THIS RECEIVER TUBE IS CUT TO A LENGTH AND BUTT WELDED
TO EXISTING PORTION OF RECEIVER TUBE.
FINAL OVERALL LENGTH TO BACK OF MAGAZINE HOUSING SHOULD BE 9.125.

RESTRICTED
MATERIAL

SCALE FULL	MATERIAL SEE NOTE 1	CKD	TOLERANCES DEC 2 PL. ± [illegible] DEC 3 PL. ± [illegible] ANGLES ± [illegible]
DWN	FINISH SEE NOTE 2	DATE	
TITLE: YUGOSLAV 49/57 RECEIVER		REV.	NO.

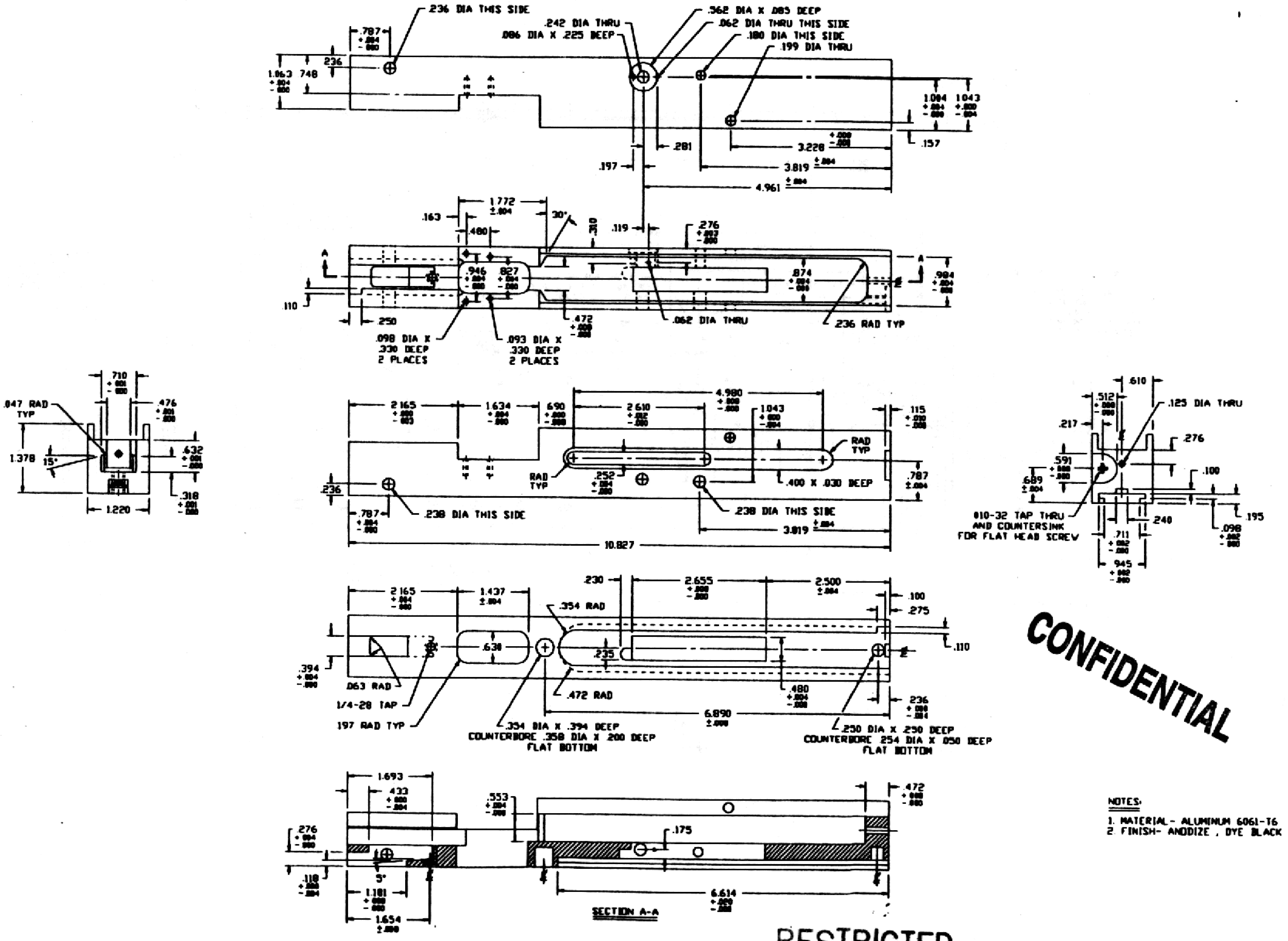
.236 DIA THIS SIDE
.242 DIA THRU
.086 DIA X .225 DEEP
.562 DIA X .085 DEEP
.062 DIA THRU THIS SIDE
.180 DIA THIS SIDE
.199 DIA THRU
.787
1.063
.748
.236
1.004
1.043
.281
.157
.197
3.228
3.819
4.961
1.772
.163
.480
30°
.119
.276
.946
.827
.874
.984
.110
.250
.098 DIA X .330 DEEP 2 PLACES
.093 DIA X .330 DEEP 2 PLACES
.472
.062 DIA THRU
.236 RAD TYP
A
.710
.847 RAD TYP
.476
1.378
15°
.632
.318
1.220
2.165
1.634
.690
4.980
2.610
1.043
.115
RAD TYP
.252
.400 X .030 DEEP
.787
.236
.238 DIA THIS SIDE
3.819
10.827
.610
.512
.125 DIA THRU
.217
.276
.591
.100
.689
#10-32 TAP THRU AND COUNTERSINK FOR FLAT HEAD SCREW
.240
.195
.711
.098
.945
2.165
1.437
.230
2.655
2.500
.100
.275
.354 RAD
.638
.235
.110
.394
.063 RAD
1/4-28 TAP
.197 RAD TYP
.472 RAD
.480
6.890
.236
.354 DIA X .394 DEEP COUNTERBORE .358 DIA X .200 DEEP FLAT BOTTOM
.250 DIA X .250 DEEP COUNTERBORE .254 DIA X .050 DEEP FLAT BOTTOM
1.693
.433
.553
.472
.276
.175
.118
5°
1.181
1.654
6.614
SECTION A-A

CONFIDENTIAL

NOTES:

1. MATERIAL- ALUMINUM 6061-T6
2. FINISH- ANODIZE , DYE BLACK

RESTRICTED MATERIAL

SCALE FULL	MATERIAL SEE NOTE 1	CKD	TOLERANCES DEC. 2 PL. ± DEC. 3 PL. ± ANGLES ± .5°
DWN	FINISH SEE NOTE 2	DATE	
TITLE: AMERICAN 180 RECEIVER (FULL AUTO)		REV.	NO.

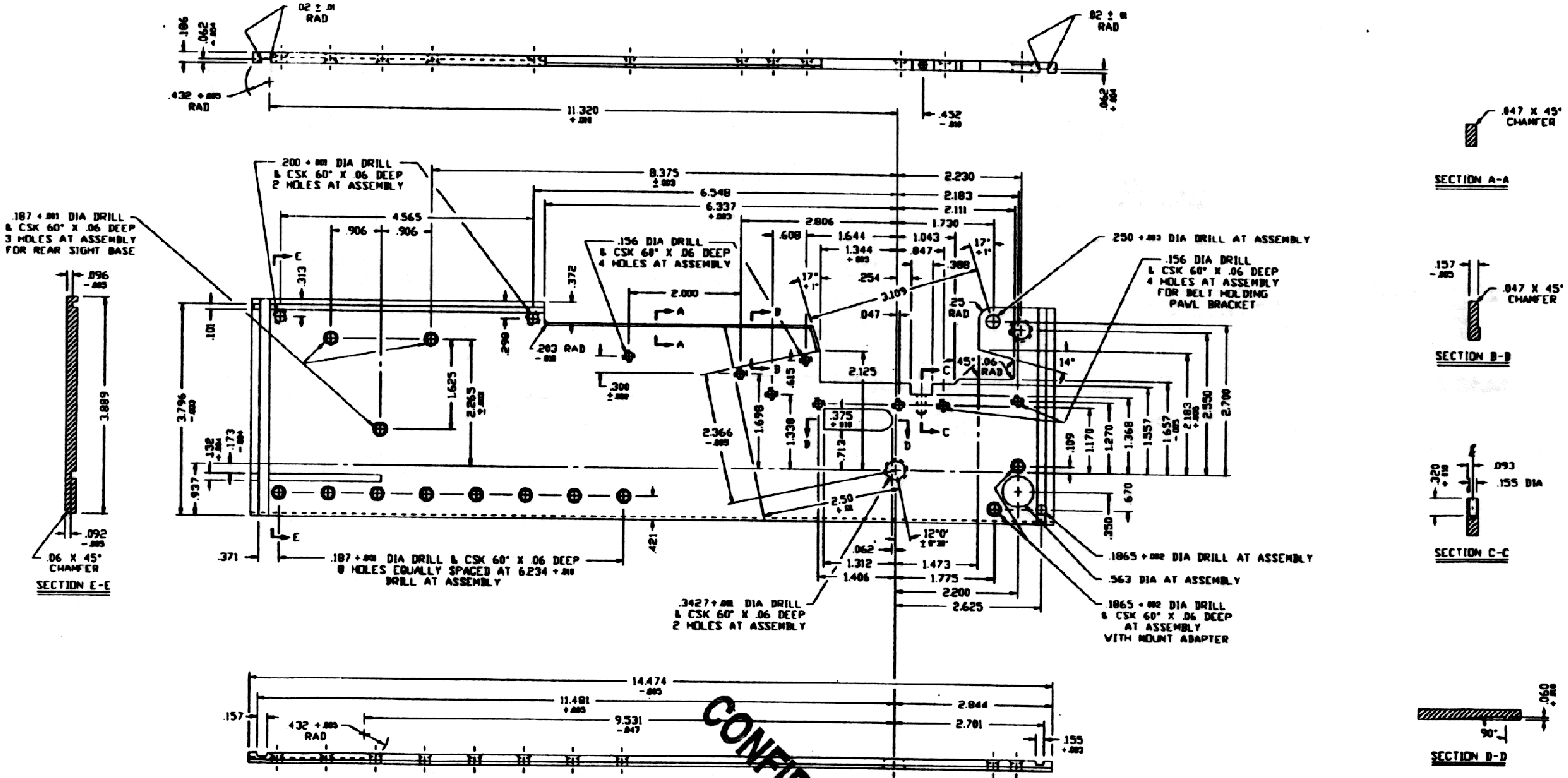
.02 ± .01 RAD
.02 ± .01 RAD
.186
.062
.432 + .005 RAD
11.320
.432
.062
.200 + .001 DIA DRILL & CSK 60° X .06 DEEP 2 HOLES AT ASSEMBLY
8.375 ± .003
6.548
6.337
2.230
2.183
2.111
2.806
1.730
.608
1.644
1.043
1.344
.847
.388
17° ± 1°
17° ± 1°
.254
3.109
.047
.25 RAD
.06 RAD
45°
14°
.187 + .001 DIA DRILL & CSK 60° X .06 DEEP 3 HOLES AT ASSEMBLY FOR REAR SIGHT BASE
4.565
.906
.906
.313
.372
.156 DIA DRILL & CSK 60° X .06 DEEP 4 HOLES AT ASSEMBLY
2.000
.101
.290
.203 RAD
.300
1.625
2.265
3.796
.132
.173
.937
.371
.421
.187 + .001 DIA DRILL & CSK 60° X .06 DEEP 8 HOLES EQUALLY SPACED AT 6.234 DRILL AT ASSEMBLY
.096
3.889
.092
.06 X 45° CHAMFER
SECTION E-E
A
B
C
D
E
2.125
.415
1.698
1.338
2.366
.375
.713
2.50
12°0'
.062
1.312
1.406
1.473
1.775
2.200
2.625
.3427 + .001 DIA DRILL & CSK 60° X .06 DEEP 2 HOLES AT ASSEMBLY
.250 + .003 DIA DRILL AT ASSEMBLY
.156 DIA DRILL & CSK 60° X .06 DEEP 4 HOLES AT ASSEMBLY FOR BELT HOLDING PAWL BRACKET
.109
1.170
1.270
1.368
1.557
1.657
2.183
2.550
2.700
.670
.350
.1865 + .002 DIA DRILL AT ASSEMBLY
.563 DIA AT ASSEMBLY
.1865 + .002 DIA DRILL & CSK 60° X .06 DEEP AT ASSEMBLY WITH MOUNT ADAPTER
14.474
11.481
9.531
2.844
2.701
.157
.432 + .005 RAD
.155
.047 X 45° CHAMFER
SECTION A-A
.157
.047 X 45° CHAMFER
SECTION B-B
.320
.093
.155 DIA
SECTION C-C
.060
90°
SECTION D-D

CONFIDENTIAL

RESTRIC.ED
MATERIAL

NOTES:

1. MATERIAL- 4130 PLATE OR O.H. FLAT GROUND STOCK
2. FINISH- PARKERIZE
3. ORIGINAL MATERIAL STEEL FS4042, FS4047, FS4640 PER MIL SPEC QQ-S-624
4. HEAT TREAT REAR END FOR ONE INCH ROCKWELL "C"43-49
   ANNEAL AROUND TWO HOLES.

SCALE FULL	MATERIAL SEE NOTE 1	CKD.	TOLERANCES ANGLES ± 0°
DWN.	FINISH SEE NOTE 2	DATE	
TITLE: BROWNING M1919A4 AND A6 LEFT HAND SIDE PLATE		REV.	NO.

SHEET 1 OF 2

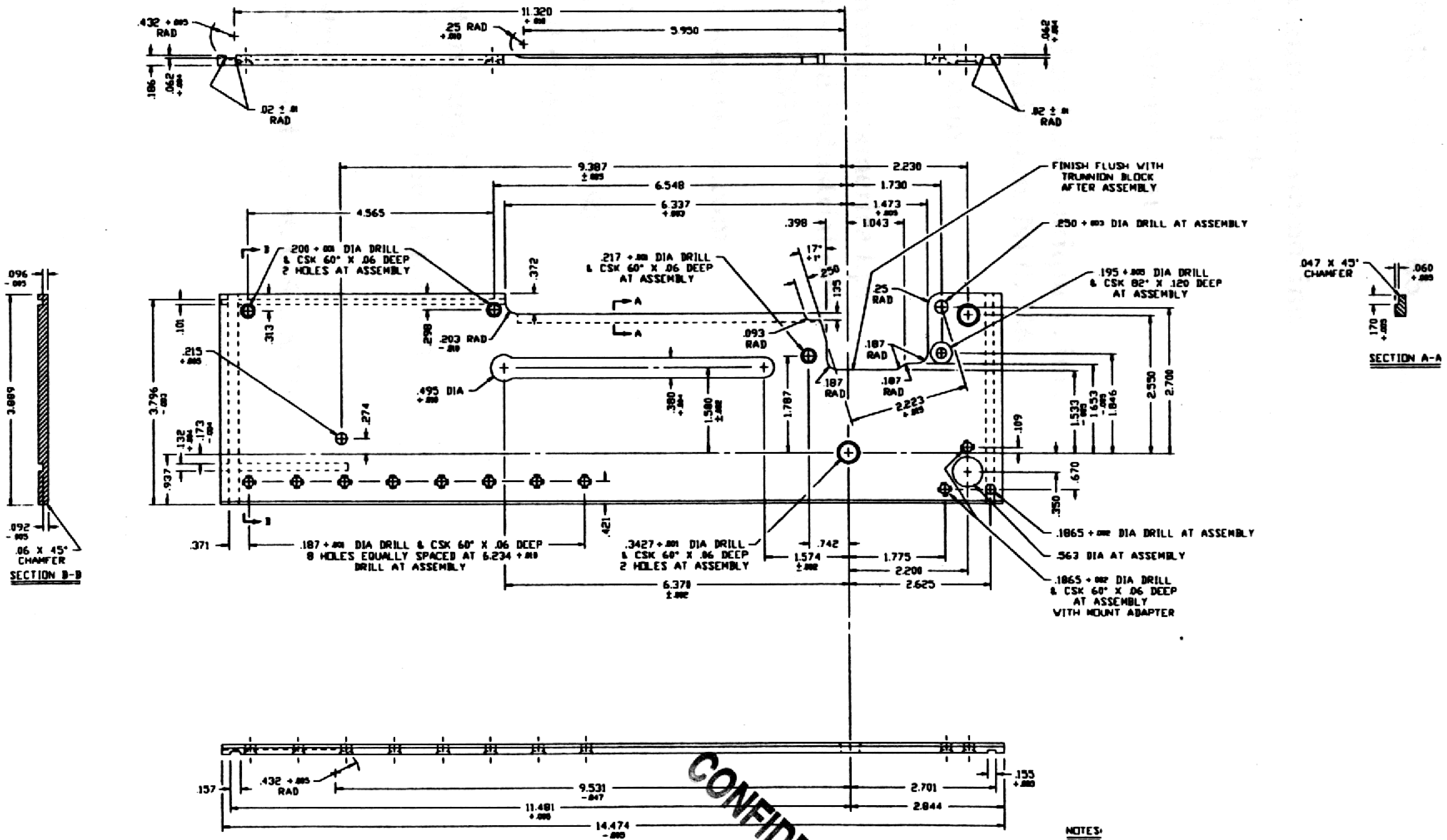
.432 +.005 RAD
11.320
.25 RAD
5.950
.042 +.004
.186
.062 +.004
.02 ± .01 RAD
.02 ± .01 RAD
9.387 ±.005
2.230
6.548
1.730
6.337 +.002
1.473 +.005
4.565
.398
1.043
FINISH FLUSH WITH TRUNNION BLOCK AFTER ASSEMBLY
.250 +.003 DIA DRILL AT ASSEMBLY
.195 +.005 DIA DRILL & CSK 82° X .120 DEEP AT ASSEMBLY
.208 +.001 DIA DRILL & CSK 60° X .06 DEEP 2 HOLES AT ASSEMBLY
.217 +.001 DIA DRILL & CSK 60° X .06 DEEP AT ASSEMBLY
17° ±1°
.250
.135
.372
.25 RAD
.093 RAD
.187 RAD
.187 RAD
.187 RAD
.101
.313
.298
.203 RAD
.215 +.005
.495 DIA
.380
1.580 ±.002
1.787
2.223 +.005
2.550
2.700
1.533
1.653
1.846
.109
.670
.350
.274
3.796
.132
.173
.937
.421
.096
3.889
.092
.06 X 45° CHAMFER
SECTION B-B
.047 X 45° CHAMFER
.060 +.005
.170 +.005
SECTION A-A
A
A
B
B
.371
.187 +.001 DIA DRILL & CSK 60° X .06 DEEP 8 HOLES EQUALLY SPACED AT 6.234 +.010 DRILL AT ASSEMBLY
.3427 +.001 DIA DRILL & CSK 60° X .06 DEEP 2 HOLES AT ASSEMBLY
.742
1.574 ±.002
1.775
2.200
6.378 ±.002
2.625
.1865 +.002 DIA DRILL AT ASSEMBLY
.563 DIA AT ASSEMBLY
.1865 +.002 DIA DRILL & CSK 60° X .06 DEEP AT ASSEMBLY WITH MOUNT ADAPTER
.157
.432 +.005 RAD
9.531 -.047
2.701
.155 +.000
11.481 +.000
2.844
14.474 -.000

CONFIDENTIAL

RESTRICTED MATERIAL

NOTES:

1. MATERIAL- 4130 PLATE OR O.H. FLAT GROUND STOCK
2. FINISH- PARKERIZE
3. ORIGINAL MATERIAL STEEL FS4042, FS4047, FS4640 PER MIL SPEC QQ-S-624
4. HEAT TREAT REAR END FOR ONE INCH ROCKWELL "C"43-49
   ANNEAL AROUND TWO HOLES.

SCALE: FULL	MATERIAL: SEE NOTE 1	CKD	TOLERANCES DEC 2 PL. ± DEC 3 PL. ± ANGLES ± 0°
DWN	FINISH: SEE NOTE 2	DATE	
TITLE: BROWNING M1919A4 AND A6 RIGHT HAND SIDE PLATE		REV.	NO.

SHEET 2 OF 2

LIST OF PARTS SUPPLIERS

wholesale guns and ammo, inc.
232 blydenburgh rd.
central islip, NY 11722

www.gunsnammo.com

international military antiques , inc.
p.o.box 256 millington ,NJ 07946

www.ima-usa.com

inter ordnance of america l.p.
3305 westwood industrial drive
monroe , NC 28110

www.inter-ordnance.com

sarco , inc.
323 union st. p.o. box 98
stirling , NJ 07980

jeffs shooters supply
p.o.box 1054 trussville , AL 35173

rpb industries
p.o.box 367 avondale est. GA 30002